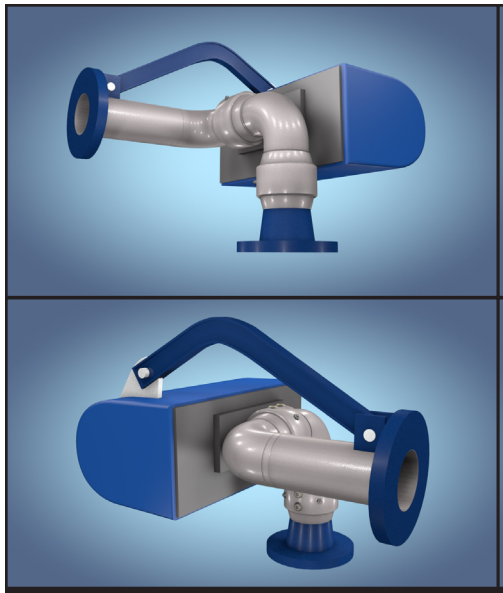

UPFEED RIGHTHAND
Upfeed Riser Flange

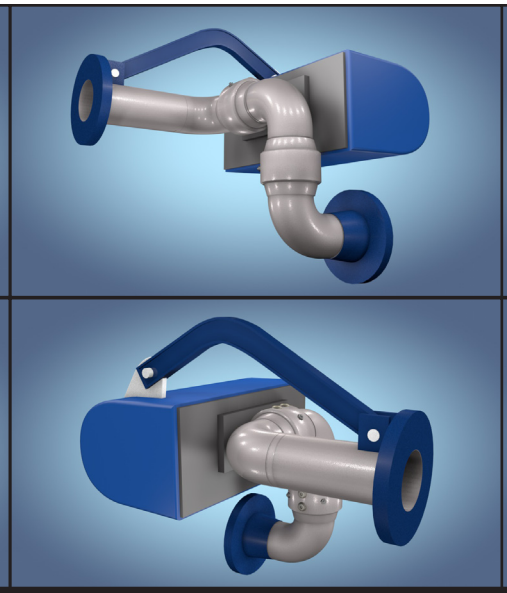

UPFEED RIGHTHAND
Sidefeed Riser Flange

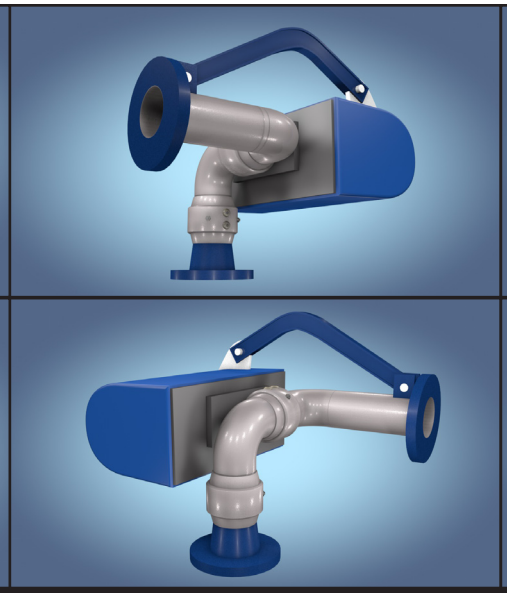

UPFEED LEFTHAND
Upfeed Riser Flange

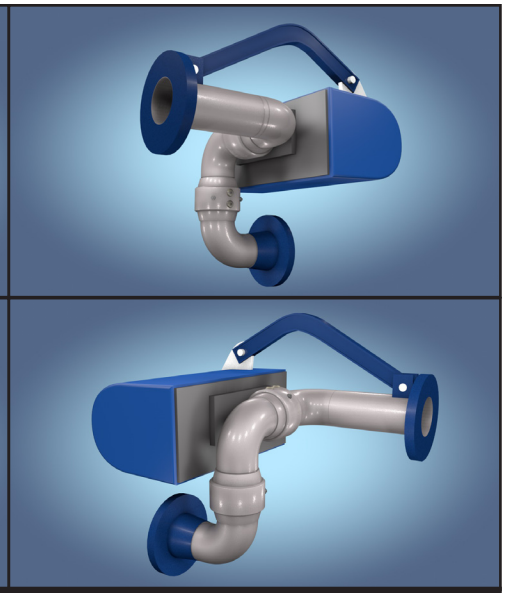

UPFEED LEFTHAND
Sidefeed Riser Flange

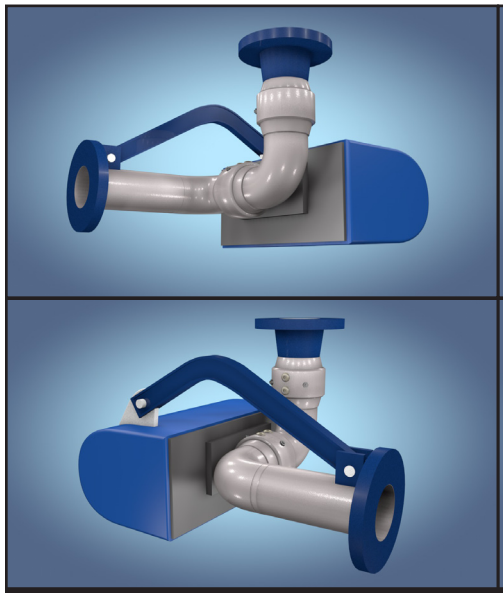

DOWNFEED RIGHTHAND
Downfeed Riser Flange

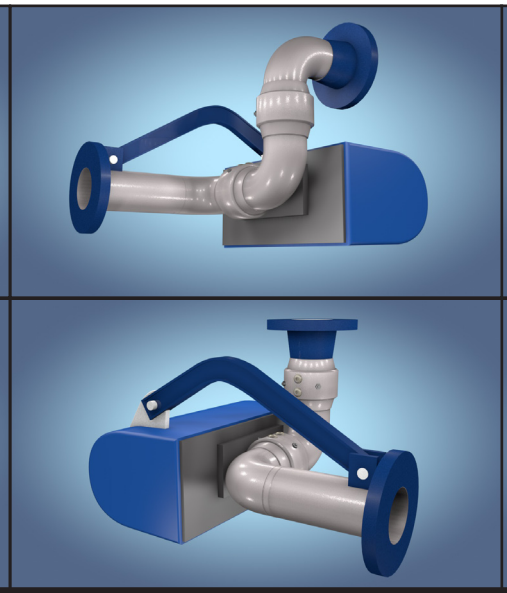

DOWNFEED RIGHTHAND
Sidefeed Riser Flange

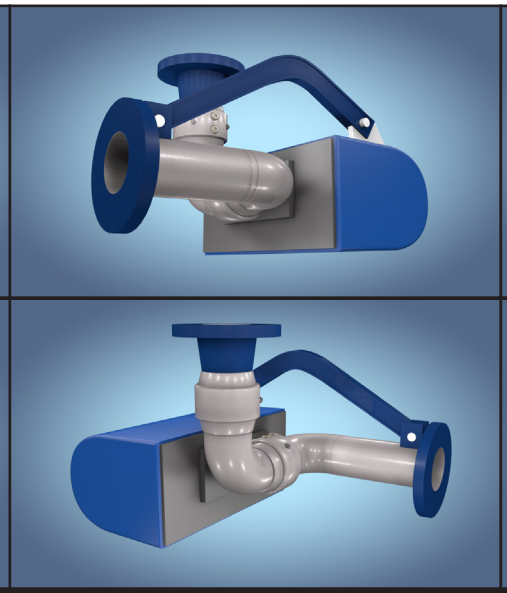

DOWNFEED LEFTHAND
Downfeed Riser Flange

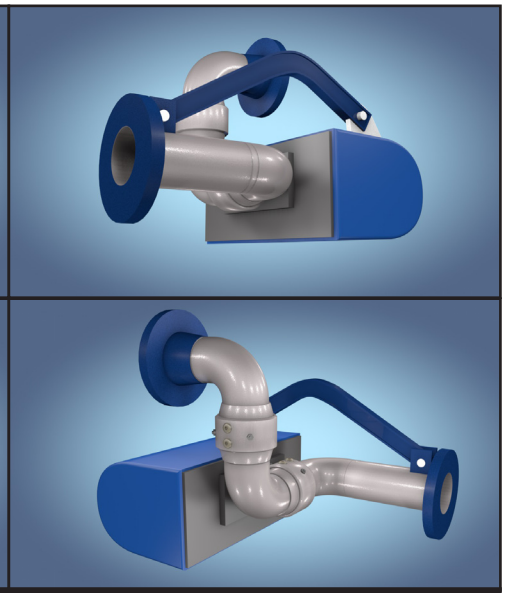

DOWNFEED LEFTHAND
Sidefeed Riser Flange